HIGH SPEED BUN DIVIDER

Shown With Optional Rounder

- **New Vector Technology Improves Scaling, Decreases Dough Shear, and Increases Vacuum System Efficiency**
- **Extrusion Divider Designed for High Speed Bun Production**
- **Most Accurate Scaling Available**
- **Highest Speeds Available on Soft Buns, Over 5,000 Dozen/Hour**

HIGH SPEED BUN DIVIDER

FEATURES & BENEFITS

Most Accurate Scaling Available Through Advanced Extrusion Technology

- Increased product yield
- Reduced waste
- Improved product uniformity
- Typical scaling accuracy of +/- 1% on bun doughs
- Consistent scaling accuracy over the life of the divider - 15 years or more

Reduced Operating Cost

- No divider oil required, reducing operating and sanitation cost
- Efficient design with few moving parts for reduced maintenance cost
- Rotary drive design provides a service life 3-4 times that of conventional dividers

Increased Productivity and Flexibility

- Increased operating speeds up to 135 cuts per minute can increase hourly production yield
- Long, continuous runs for days at a time without downtime for cleaning or maintenance adjustments can increase profits per unit

Improved Automation

- Operator interface-based recipe management system is provided for automated divider setup
- Electronic synchronization system is tied into the Pan-O-Mat, allowing the HBD recipe management system to automate the setup of the Pan-O-Mat as well

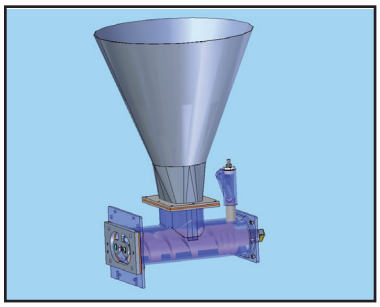

New Vector Auger/Tunnel/Vacuum System

MECHANICAL FEATURES

- Stainless steel frame and hopper for durability and corrosion resistance
- Precision stainless steel tunnel housing for durability and minimum dough flow resistance
- Dual auger design for gentle dough handling at high throughputs
- Eurodrive gearmotors for the augers, metering pump, cut-off knife and proofer drives
- 3" (76 mm) stainless steel metering pump for precise flow control
- Patented UHMW free-flow manifold for even dough distribution
- Patented diaphragm valves with position indicators for maximum port-to-port flow control
- Rotary cut-off with individual UHMW cut-off knives
- Easy access to all operational areas for easy sanitation and maintenance
- Venturi-style vacuum system with vacuum transducer
- Freestanding with casters for easy mobility for sanitation and maintenance

ELECTRICAL FEATURES

Operator panel is NEMA 4 rated and mounted on a swivel arm for easy access

Operator panel includes the following:

- Allen Bradley keypad operator interface to control:
  - Auger speed
  - Metering pump speed
  - Vacuum pressure
  - Alarm messages
  - Product codes
- Allen Bradley push-buttons for:
  - Two-button start
  - Stop/Emergency stop
  - MCR reset

NEMA 12 painted remote electrical enclosure including:

- Main disconnect switch
- Full voltage magnetic NEMA rated starters
- Allen Bradley PLC and inverters
- Closed loop pressure control system with pressure transducer

PLC controlled cleaning cycle system for reduced sanitation cost

Electronic proofer synchronization kit

OPTIONS

Mechanical Options

- Automatic divider pushback
- Extrusion type non-stick rounder belt
- Patented quick clean manifold
- Hopper block-off slide
- UHMW spiral tunnel rounder bars
- Aluminum spiral tunnel rounder bars
- Hinged rounder bar lift kit
- Rounder AC speed control package
- Product memory increase
- Proofer drive kit
- Spare parts kit

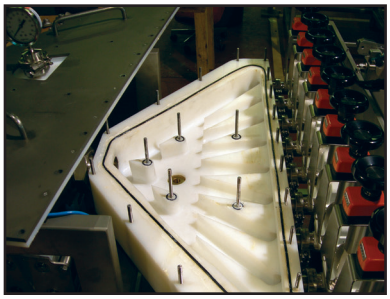

Patented Quick Clean Manifold

Electrical Options

- PLC upgrade
- Stainless steel remote electrical panel in lieu of painted
- Panel air conditioner in lieu of Exair panel cooler
- Panel modem for remote diagnostics
- CE confirmed electrical package
- Inverters in lieu of Allen Bradley
- Operator interface in lieu of Allen Bradley

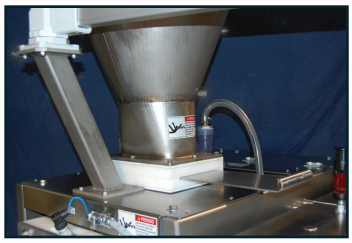

Hopper Block-Off Slide

SPECIFICATIONS

	Maximum Throughput*	Scaling Range*	Speed Range (pcs/hr.)	Approximate Shipping Weight
HBD 400	7,500 lb./hr. (3402 kg/hr.)	7/8-6 oz. (25-170 g)	9,600-32,400	4,000 lb. (1814 kg)
HBD 600	11,000 lb./hr. (4990 kg/hr.)	7/8-6 oz. (25-170 g)	14,400-48,600	4,100 lb. (1860 kg)
HBD 800	15,000 lb./hr. (6804 kg/hr.)	7/8-6 oz. (25-170 g)	19,200-64,800	4,200 lb. (1905 kg)

*Throughput, maximum speed and scaling range are dependent on several factors including dough condition, product configuration and other associated equipment. Gearmotors are sized to meet a specific production range.

Electrical Requirements:
Main Power: 23 KVA
PLC I/O Voltage: 24VDC in/120VAC out
Air Requirements: 25 SCFM @ 87 PSIG
Water Requirements: 4 to 6 gal. (15 to 23 L)/min. at 120° F (49° C) - cleaning only

Approximate Shipping Dimensions:
99" L x 57" W x 80" H
(2515 mm x 1448 mm x 2032 mm)

HIGH SPEED BUN DIVIDER

DIMENSIONAL DRAWING

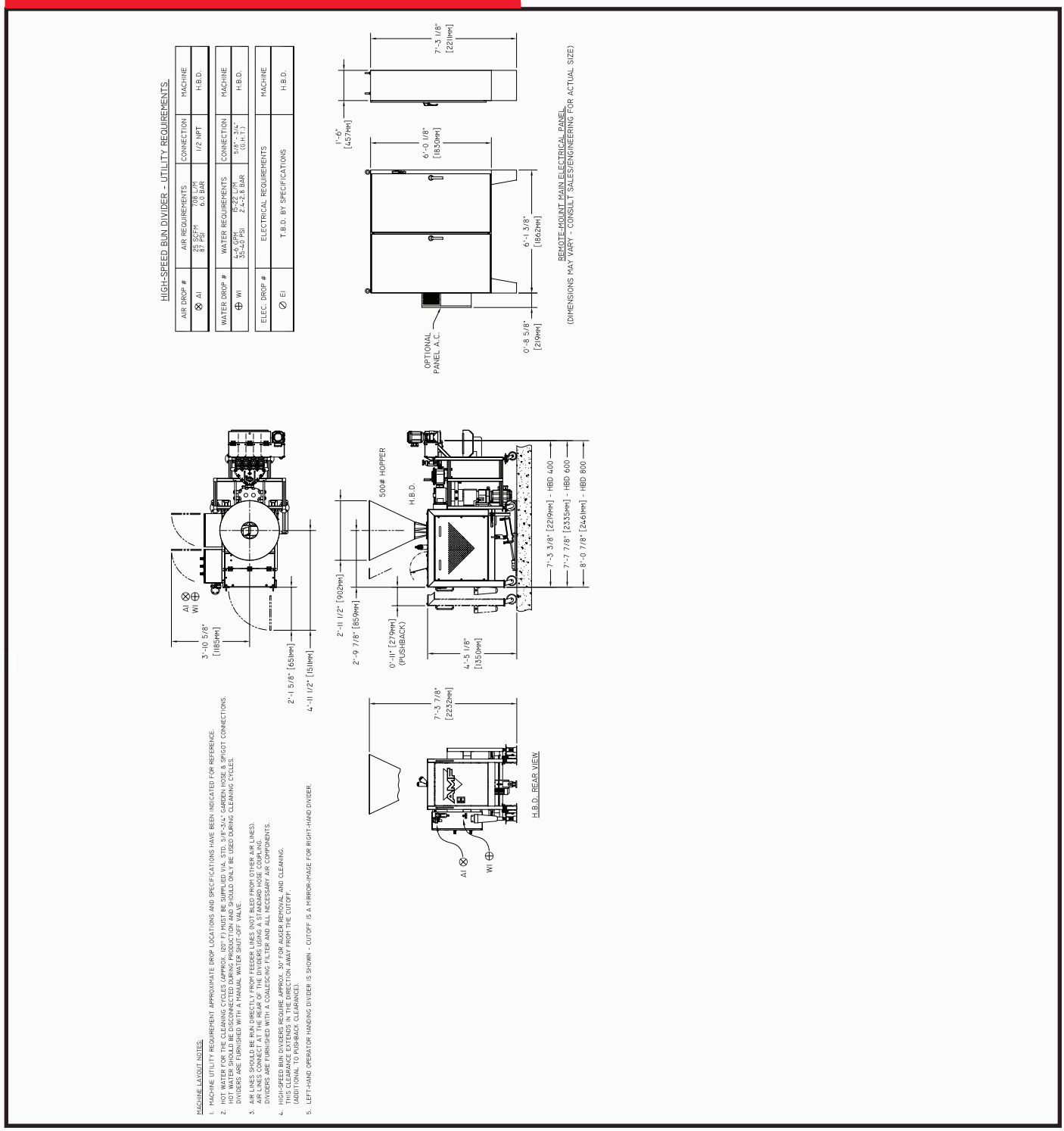

Headquarters:
2115 W. Laburnum Ave.
Richmond, Virginia 23227
Tel: 1-800-225-3771
or 1-804-355-7961
Fax: 1-804-342-9724
sales@amfbakery.com

Europe Office:
6 The Sidings
Station Road, Guiseley
Leeds LS20 8BX, England
Tel: 44-1943-875703
Fax: 44-1943-871806
sales-europe@amfbakery.com

Asia Office:
2206, A-Bldg.
No.3 Estate Mansion
No.1 Shuguangxili Rd.
Beijing, China 100028
Tel: 86-10-5822 2950
Fax: 86-10-5822-2952
sales-asia@amfbakery.com

FOR MORE INFORMATION PLEASE CALL YOUR ACCOUNT MANAGER OR

1-800-BAKERS-1

www.amfbakery.com

AMF's focus on continuous improvement may result in changes to machinery specifications without notice.

AMF is a Markel Bakery Group Company

04/2013